1.3.7.3 If the foregoing efforts fail to achieve a resolution or are not available, the dissenting carrier may request the Chairman of the Open Top Loading Rules Committee to intervene. The request is to be made through the Manager, AAR Loading Rules (Phone: 719-584-0511), 55500 DOT Road, Pueblo, CO 81001.

1.3.7.4 Upon request, the Chairman will appoint three neutral members of the OTLRC, preferably from the same region over which the controversial shipment will move.

1.3.7.5 The appointed three-member panel will review the facts in the dispute, hearing from all parties. If deemed necessary by the panel members, it is their prerogative to conduct an on-the-ground investigation of the shipment in question. Panel members may each dispatch a designated neutral representative to conduct an on-the-ground investigation who, in turn, will report his or her findings directly to the panel members and the chairman.

1.3.7.6 The three-member panel will have full authority to render an immediate decision.

1.3.7.7 In cases where the three-member panel rules that the loading method in question is adequate and safe, the receiving carrier would thereafter be obligated to make, at its own expense, any alterations to the load that it might deem necessary.

1.4 AAR Inspection of Open Top Loads

1.4.1 AAR inspectors are responsible for inspecting open top loads to ensure compliance with the General Rules and specific figures. The Railway Association of Canada (RAC) Managers of Car Loading Rules have sole responsibility for compliance inspection in Canada.

1.4.2 Work Procedures by AAR or RAC Inspectors

1.4.2.1 Inspect loads at railroads and interchange points; inspect loads at request of shippers, railroad interchange bureaus, and/or associations.

1.4.2.2 Call on shippers, accompanied by railroad mechanical personnel, to discuss loading procedures.

1.4.2.3 Discuss loading problems with railroad personnel.

1.4.2.4 Check on veracity of load adjustments and/or transfer charges at interchange points.

1.4.2.5 Determine that shippers, railroads, interchange bureaus, and/or associations have and are using current editions of these open top loading rules, as well as AAR and RAC Circular Letters where applicable.

1.4.3 Reporting

1.4.3.1 AAR inspectors will submit a report to the Manager, AAR Loading Rules, and also verbally advise supervisory personnel at points visited of exceptions taken.

1.4.3.2 Reports indicating loading rule violations will be forwarded by the Manager, AAR Loading Rules, to the originating railroad representative on the Open Top Loading Rules Committee or to the chief mechanical officer, or equivalent, if that railroad is not represented on the Committee, for handling.

2. REQUIRED CLEARANCES

2.1 The brake wheel clearance must not be less than requirements shown in Fig. 2.1 and should be increased as much as is practical and consistent with proper location of load.

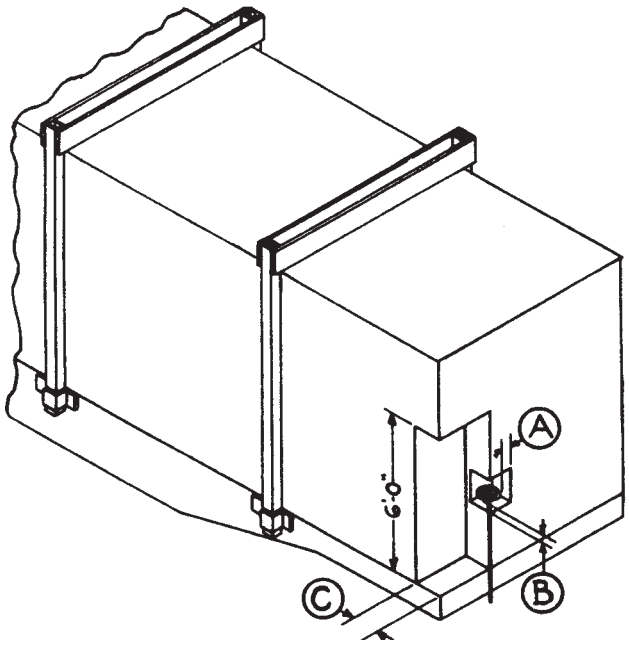

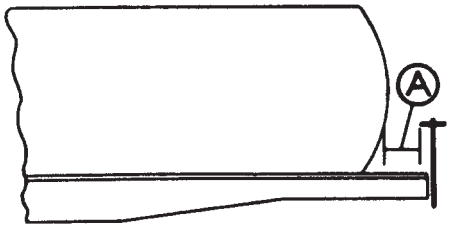

Item	Description
A	6 in. clearance in back, on both sides of, and above brake wheel, except as shown for tanks and similar shapes in one piece.
B	4 in. clearance underneath brake wheel.
C	12 in. minimum clearance from end of car to load, extending from center of brake wheel to side of car and 6 ft. above car floor. On gondola cars this space may be utilized from floor of car to 4 in. below bottom of brake wheel, Item "B."

Fig. 2.1 Required clearances

2.2 Lever-type hand brakes require 4 in. clearance around the handle of the operating lever and release lever throughout their full range of motion.

Fig. 2.2 Lever-type hand brake

2.3 When the loading and hauling of long commodities require more than one car, an operating hand brake must be maintained on at least one of the combined cars. All remaining hand brakes may be temporarily disabled until the cars are made empty and no longer combined for the purpose of such shipment. When the combined cars are separated, all disabled hand brakes must be restored to operation. (See the 49 *Code of Federal Regulations*, Part 231, Railroad Safety Appliance Standards.)

2.4 Handholds and other safety appliances must be accessible and must have a minimum of 2-in. clearance as cited in 49 CFR Part 231.

IMPLEMENTED 11/2015

3. WEIGHT DISTRIBUTION AND LOAD LOCATION ON SINGLE CARS AND INTERMODAL TRAILERS AND CONTAINERS

3.1 Unless otherwise specified, the load distribution covered in this rule applies only to general service cars.

3.2 Unless otherwise allowed in specific figures, all load weights must be equally distributed end-to-end and side-to-side at origin. If ballast is needed to equalize weight distribution, refer to Rule 3.4.2.

3.3 For load distribution on 85-ft and 89-ft flatcars, including converted TOFC/COFC and multilevel flatcars, the shipper and originating carrier must confer with the car owner.

3.4 Load Distribution

3.4.1 Weight Limits

3.4.1.1 Truck Limits

The weight of load on a car must not exceed the load limit stenciled on the car. The weight of load on one truck must not exceed one-half of the load limit stenciled on the car. In case of doubt, this must be verified by weighing the car.

3.4.1.2 Lateral Limits

The load must be located so that the weight along both sides of the car is equal for the entire length of the load.

3.4.1.3 Floor Limits

Commodities having a concentrated load bearing footprint cannot exceed the floor rating of the car. If floor rating is unknown, use 130 psi on a wood deck car; 430 psi on a 3/8-in. steel deck/nailable steel floor; and 740 psi on a 1-in. steel deck car, at any point on the car deck. The car deck must be in suitable condition. If in doubt, contact the serving railroad.

IMPLEMENTED 11/2015

THIS PAGE LEFT BLANK INTENTIONALLY

IMPLEMENTED 11/2015